

Single Diesel Oil Filter(Fig.09.01)

Used between the tanks and the pump. The inlet is through the lower flange connection; after filtering, clean flow is delivered to the line through the upper flange.

PRODUCT DETAILS

- Safe Operating Temperature: -10/+120°C
- Connection Standard: Design accordance with DIN 2501
- Material Standard: DIN 2448 Pipe
- Filter: EMS 90 (25-32-40) / EMS 750 (DN 50)

*Can be manufactured with PN 10/16 – JIS 5K/10K – ANSI 150LB flange connections on request.

PRODUCT SPECIFICATIONS

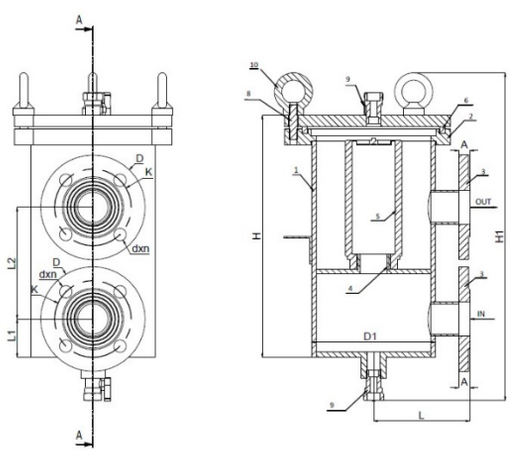

ITEM	Part Name	Material
1	BODY	S235JR
2	RING	S235JR
3	FLANGE	S235JR
4	THREADED PIPE	S235JR
5	FILTER	S235JR
6	GASKET	NBR
7	COVER	S235JR
8	STUD BOLT	S355JR
9	BALL VALVE	MS 58
10	EYEBOLT	S235JR GALV.

DN	D	K	A	dxn	D1	H	H1	L	L1	L2	Weight (Kg)
25	115	85	16	14x4	140	335	445	120	76	136	30.00
32	140	100	18	18x4	168	335	445	140	76	160	32.50
40	150	110	18	18x4	168	340	450	140	76	160	33.00
50	165	125	20	18x4	219	340	455	165	76	170	36.50