

Duplex Fuel Filter(Fig.09.02)

Used between the tanks and the pump. The duplex design makes cleaning easier.

PRODUCT DETAILS

- Safe Operating Temperature: -10/+120°C
- Connection Standard: Design accordance with DIN 2501
- Material Standard: DIN 2448
- Filter: EMS 90 (15-20-25-32-40) / EMS 750 (DN 50)

***Can be manufactured with PN 10/16 – JIS 5K/10K – ANSI 150LB flange connections on request.**

PRODUCT SPECIFICATIONS

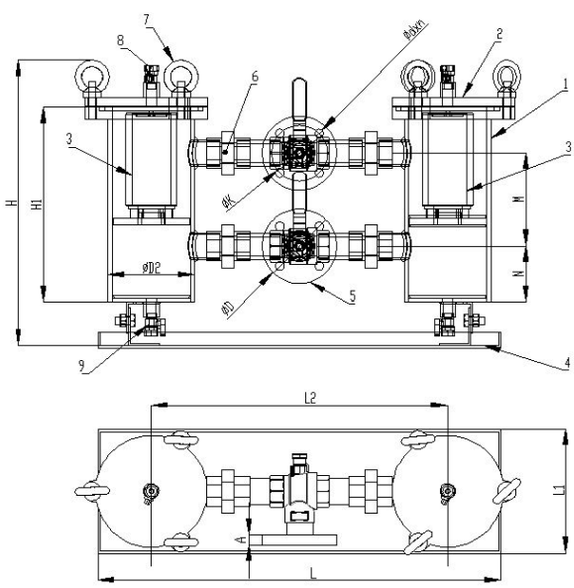

ITEM	Part Name	Material
1	BODY	S235JR
2	COVER	S235JR
3	FILTER	S235JR
4	SKILLET	S235JR
5	THREADED BALL VALVE	11SMn37(Free-Cutting Steel)
6	CONNECTER	S235JR
7	EYEBOLT	S235JR GALV.
8	BALL VALVE	MS 58

DN	D	K	A	dxn	D2	H	H1	L	L1	L2
25	115	85	16	14x4	140	490	310	600	250	457
32	140	100	16	18x4	168	490	310	650	250	535
40	150	110	16	18x4	168	490	310	650	250	535
50	165	125	18	18x4	219	490	310	800	250	637