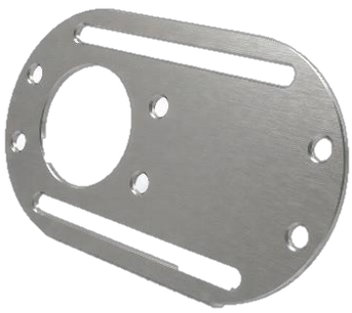

Spectacle Flange (Fig.03.41)

The stainless spectacle flange is a connection fitting placed between two flanges. It works like a valve in the piping system: the system is opened and closed by sliding it left and right between the two flanges along its own slide.

It is used in piping systems on liquid, gas and solid fluid lines.

Stainless fittings are mainly used in corrosive environments, places requiring hygiene or for decorative purposes.

PRODUCT DETAILS

- Operating Temperature: -80°C / +420°C
- Working Pressure: PN 16
- Connection Standard: TS EN 1092-1

PRODUCT SPECIFICATIONS

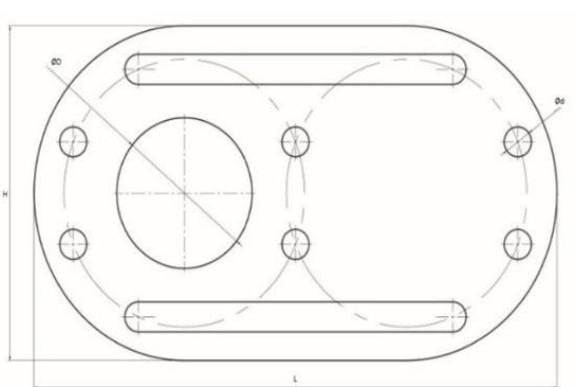

ITEM	Part Name	Material
1	BODY	AISI 316 / 316L / AISI 304 / 304L / EN 1.4307 / EN 1.4404

DN	15	20	25	32	40	50	65	80	100	125	150	200	250	300
D	22	28	34	44	49	61	77	90	115	140	172	220	273	328
k	65	75	85	100	110	125	145	160	180	210	240	295	355	410
H	95	105	130	140	150	165	185	200	220	250	285	340	405	460
L	140	158	175	210	228	252	286	346	386	444	507	620	740	856
dxn	14	14	14	18	18	18	18	18	18	18	18	22	22	26
t	3	3	3	3	3	3	3	3	3	3	3	3	3	3
Weight (Kg)	0,2	0,25	0,3	0,45	0,5	0,6	0,8	1,05	1,25	1,65	2,5	2,95	4,15	5,2