

Proportional Lift Safety Valve (With Spring)
(Fig.03.43)

Used in hot and cold water systems, thermal oil systems, steam systems and all non-acidic and non-alkaline flow systems.

PRODUCT DETAILS

- Max. Operating Temperature: 225°C
- Connection Standard: DIN 2533
- Dimension Standard: DIN 3202-F32
- Type: FULL LIFT / PROPORTIONAL
- Working Pressure: PN 16

PRODUCT SPECIFICATIONS

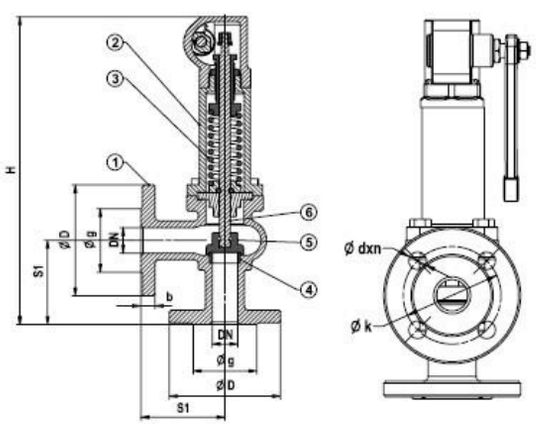

ITEM	Part Name	Material
1	BODY	GGG 40.3
2	BONNET	GGG 40.3
3	SPRING	S.S
4	BUSH	S.S
5	DISC	S.S
6	SHAFT	S.S

DN	25	32	40	50	65	80	100
S1	100	105	115	125	145	155	175
H	383	402	413	430	519	584	636
D	115	140	150	165	185	200	220
k	85	100	110	125	145	160	180
g	65	76	84	99	118	132	156
dxn	14x4	19x4	19x4	19x4	19x4	19x8	19x8
Weight (Kg)	9,80	11,70	13,80	17,00	26,5	30,00	48,00